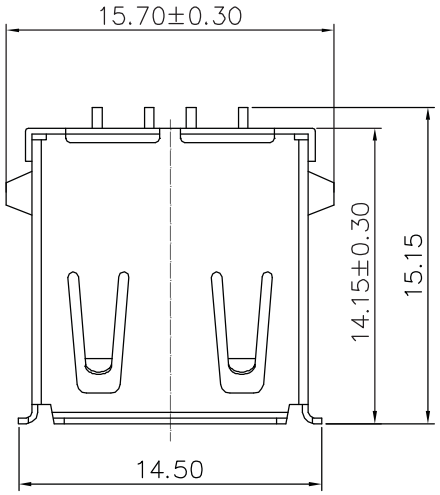

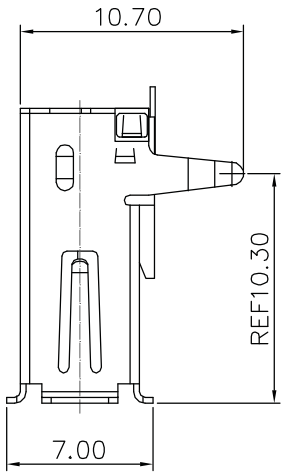

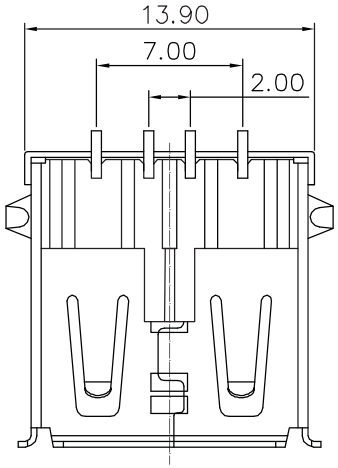

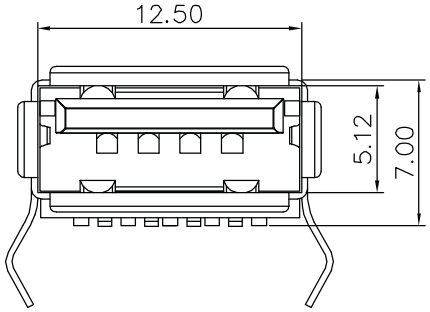

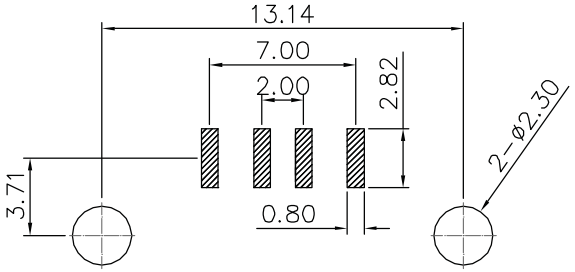

Recommended P.C.B. Pattern Layout

Material:
- Contacts: Phosphor Bronze
- Insulator: LCP+30% G.F. UL 94V-0
- Shell: Brass

Mechanical:
- Mating: 35N Max.
- Withdrawl Force: 10N Min
- Durability: 1500 Cycles Min

Electrical:
- Current- Max 1.5A
- Voltage- Max 30V
- Withstanding Voltage 500V AC
- Contact Resistance: 30MilliΩ Max
- Insulation Resistance: 1000MΩ Min

Plating:
- Contacts: Gold Flash and Tin over Nickel Plated shell: Nickel over all Plating

Environmental:
- Temperature Range: -55°C~+50°C

Unit: MM±0.25MM

RoHS Complaint

Scale	1:1						Name
TOLERANCE					Drawn	01.06.12	Chappell
X.X	±0.40				Approved		
X.XX	±0.25						
X.XXX	±0.15						
Angle	±3°						
			Modification	Date	Name		

ASSMANN WSW components

Item No. **A-USB-A/SMT-R**

Title USB Connector SMT - PCB Mount, A Type Female, 5µ" Gold, Version 1.1

Drawing No. **rev00**

Replace | Sheet