L-53MBDK BLUE

L-53MBTK BLUE

L-53MBCK BLUE

Features

- LOW POWER CONSUMPTION.
- SOLID STATE BLUE LIGHT SOURCE.
- SUITABLE FOR FULL COLOR LED DISIPLAYS AND INDICATORS DIAGNOSTIC/ANALYTICAL EQUIPMENT.

Description

The Blue source color devices are made with GaN on SiC Light Emitting Diode.

Static electricity and surge damage the LEDS. It is recommended to use a wrist band or anti-electrostatic glove when handling the LEDs.

All devices, equipment and machinery must be electrically grounded.

Package Dimensions

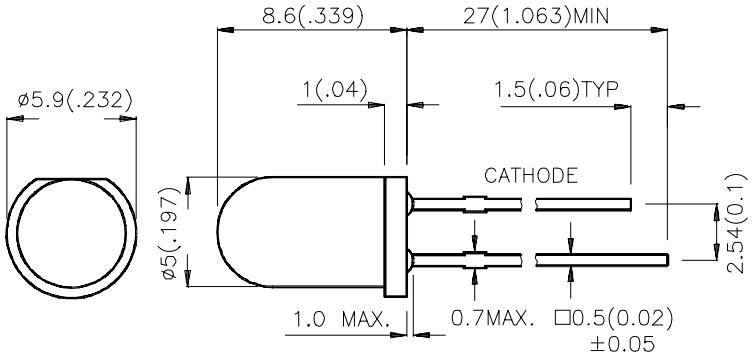

Notes:
1. All dimensions are in millimeters (inches).
2. Tolerance is ±0.25(0.01") unless otherwise noted.
3. Lead spacing is measured where the lead emerge package.
4. Specifications are subject to change without notice.

Selection Guide

Part No.	Dice	Case-Color	Iv (mcd) @ 20 mA		Viewing Angle
			Min.	Typ.	2θ1/2
L-53MBDK	Blue (GaN)	BLUE DIFFUSED	12	40	60°
L-53MBTK	Blue (GaN)	BLUE TRANSPARENT	40	65	16°
L-53MBCK	Blue (GaN)	WATER CLEAR	50	110	16°

Note:
1. θ1/2 is the angle from optical centerline where the luminous intensity is 1/2 the optical centerline value.

Electrical / Optical Characteristics at T_A=25°C

Symbol	Parameter	Device	Typ.	Max.	Units	Test Conditions
λpeak	Peak Wavelength	Blue	430		nm	IF=20mA
λD	Dominate Wavelength	Blue	455		nm	IF=20mA
Δλ1/2	Spectral Line Halfwidth	Blue	60		nm	IF=20mA
C	Capacitance	Blue	85		pF	VF=0V;f=1MHz
V_F	Forward Voltage	Blue	4.0	4.5	V	IF=20mA
I_R	Reverse Current	Blue		10	uA	VR = 5V

Absolute Maximum Ratings at T_A=25°C

Parameter	Blue	Units
Power dissipation	105	mW
DC Forward Current	30	mA
Peak Forward Current [1]	150	mA
Reverse Voltage	5	V
Operating Temperature	-40°C To +80°C	
Storage Temperature	-40°C To +85°C	
Lead Solder Temperature [2]	260°C For 5 Seconds	

Notes:
1. 1/10 Duty Cycle, 0.1ms Pulse Width.
2. 4mm below package base.

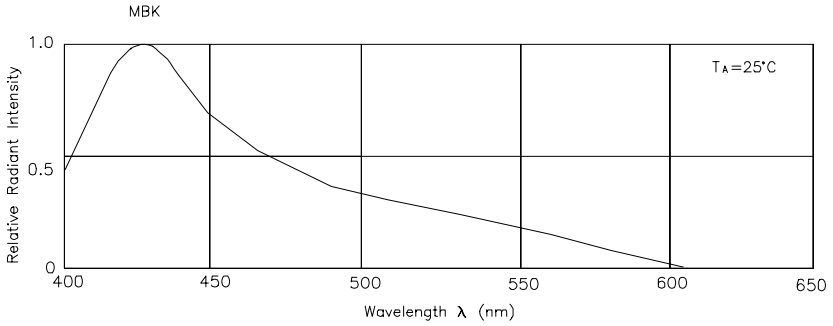

RELATIVE INTENSITY Vs. WAVELENGTH

Blue L-53MBDK,L-53MBTK,L-53MBCK

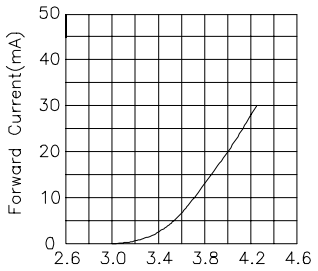

FORWARD CURRENT Vs
FORWARD VOLTAGE

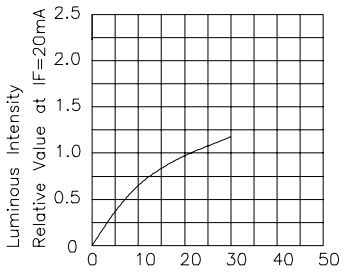

LUMINOUS INTENSITY Vs.
FORWARD CURRENT

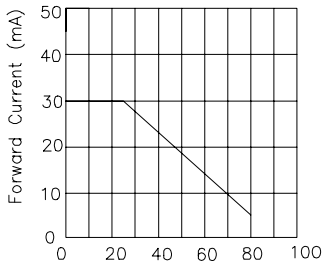

FORWARD CURRENT
DERATING CURVE

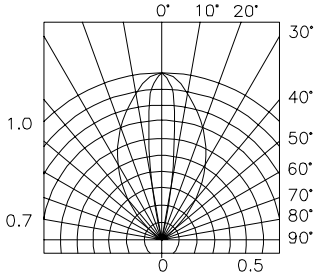

SPATIAL DISTRIBUTION