REVISIONS		
ISS	ZONE	DESCRIPTION\PER REQUEST\DATE

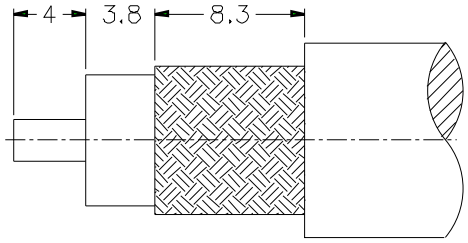

RECOMMENDED
CABLE STRIPPING DIM'S

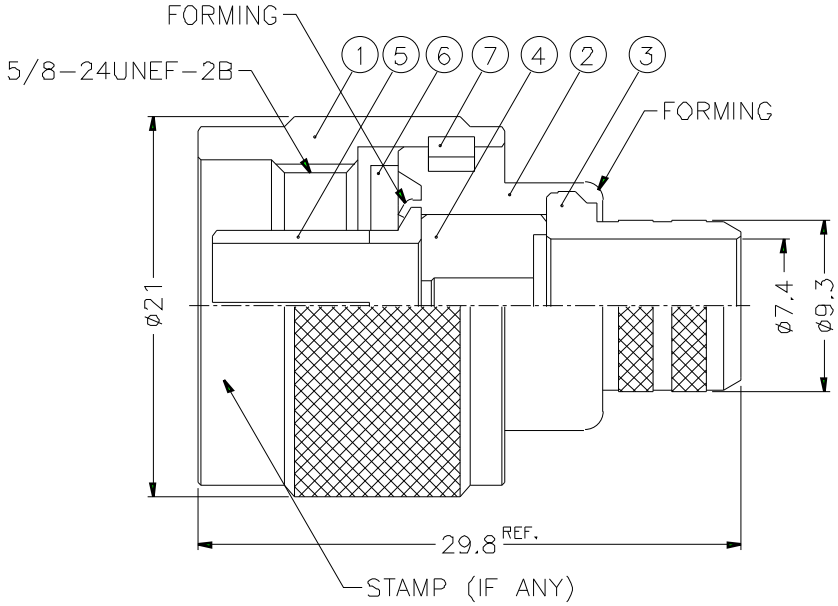

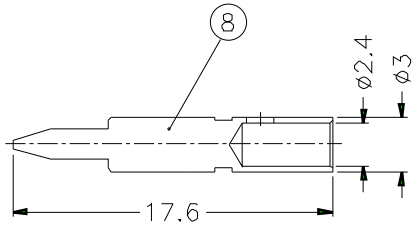

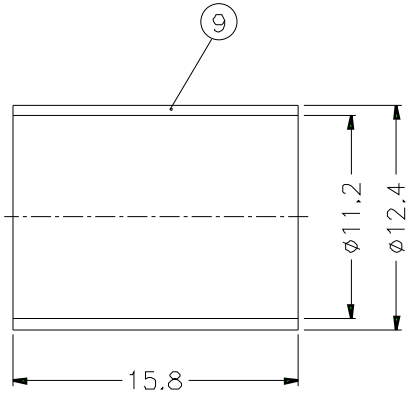

NOTES. FINISH (PLATING THICKNESS IN MICRO-INCHES)
1. BRASS PER QQ-B-626
2. NICKEL PL. 100 MIN. THICK OVER COPPER STRIKE
3. GOLD PL. 3 MIN. THICK OVER NICKEL PL. 100 MIN. THICK OVER COPPER STRIKE
4. TEFLON MIL-P-19468
5. JIS H 3250, C 2700

1. CRIMPED FERRULE
HEX CRIMP SIZE .429"
2. CRIMPED CONTACT PIN
HEX CRIMP SIZE .100"

NO.	DESCRIPTION	MATERIAL	FINISH	Q'TY	DRAWING NO
9	FERRULE	NOTE 5	NOTE 2	1	FR-124/112X158
8	CONTACT PIN	NOTE 1	NOTE 3	1	N5000-8-3/24-C
7	RETAINER RING	SUS 304	NATURAL	1	N5000-7-C
6	GASKET	SILICONE	RED	1	GS-156/8X15
5	CONTACT BODY	NOTE 1	NOTE 2	1	N5000-5
4	INSULATOR	NOTE 4	NATURAL	1	N5000-4T-50-A
3	BARREL	NOTE 1	NOTE 2	1	N5000-3-93/74
2	BODY	NOTE 1	NOTE 2	1	N5000-2
1	SHELL	NOTE 1	NOTE 2	1	N5000-1-B

DIMENSIONS ARE IN MILLIMETERS

UNLESS OTHERWISE SPECIFIED TOLERANCES
0.5-6 = ±0.2
6-30 = ±0.4
30-120 = ±0.6
120-315 = ±1
315-1000 = ±1.6
1000-2000 = ±2.4

SCALE 2.5/1 | ISSUE A

PART NO. N1121A1-NT3G-7A-50

APPROVED | DATE 10-11-01'

CHECKED | DATE 10-11-01'

DRAWN | DATE 10-11-01'

FILE NO

Amphenol

TITLE
N CRIMP PLUG

DRAWING NO.
KJ-N1121A1-NT3G-214U-50

ITEM NO.