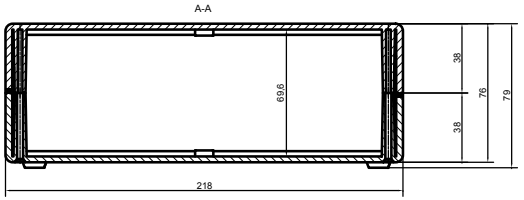

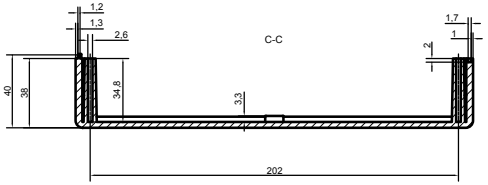

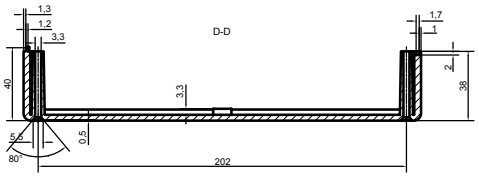

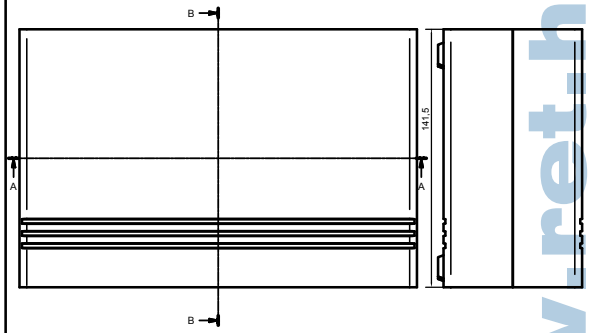

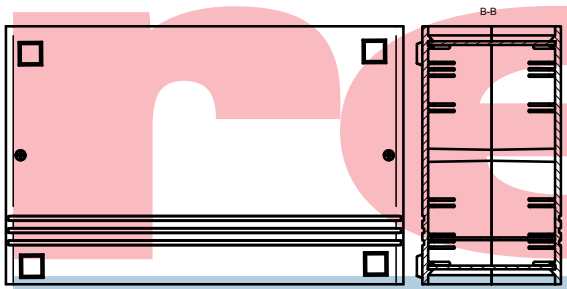

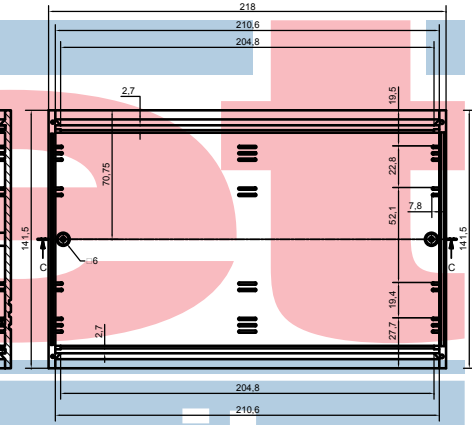

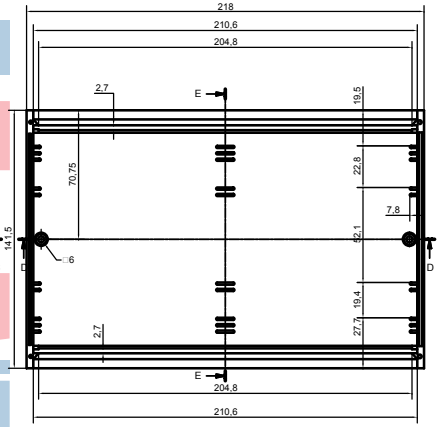

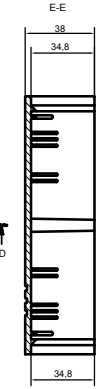

www.ret.hu
ret
elektronika
Tel.: +36 62 554-600

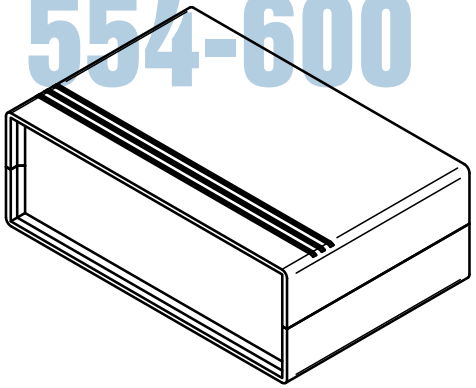

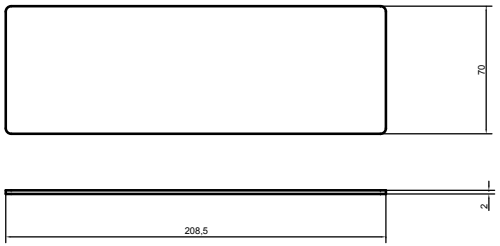

PCB MAX SIZE

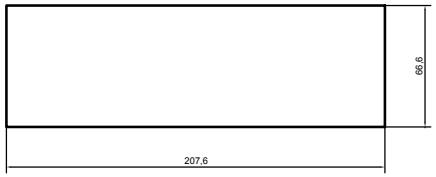

ENCLOSURES	Assembly NE33	NE33
	Subject to technical modification without prior notice. Tipographical and other errors do not justify any claim for damages. All dimensions should be verified using an actual moulded part.	Rev. Index / Date
	This document contains proprietary information. MOVO s.p.a. srl is tendered subject to the conditions that the information be retained in confidence not be reproduced or otherwise and not be used or incorporated in any product.	Date 22/02/2006 / Format design A0