ROHS Compliant

台灣駿品端子股份有限公司
TAIWAN KING PIN TERMINAL CO.,LTD
新北市樹林區俊德街 23 號
TEL:886-2-26895596.26886112 FAX:886-2-26886110
E-mail:info@tkp.com.tw http://www.tkp.com.tw

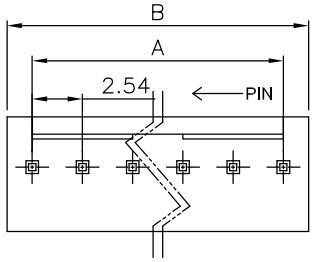

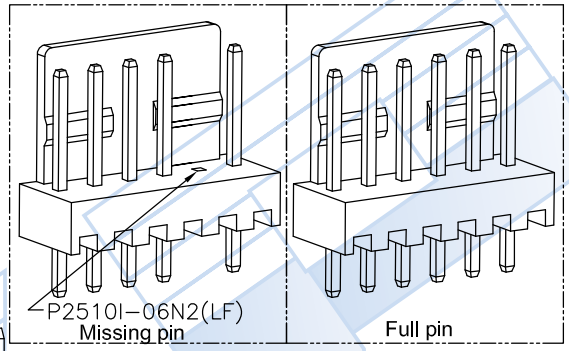

NOTE :
* Mateaial : Nylon UL 94V-2(Lead Free)
* Standard Color : White
* Contact : Brass
* Finish : Plated Tin over Nickel or Gold
* Electrical rating : UL 250V 2A, AC/DC
* .025" (0.64mm) straight square pins
* Friction lock
* Mates with 2510,2510A,2510B,2510F series housings
* 2-20 circuits available
* Universal drawing for full pin & missing pin

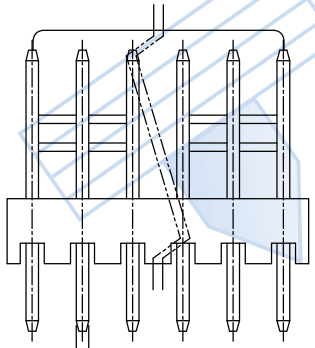

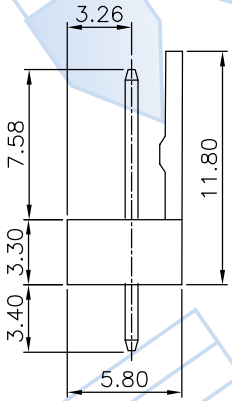

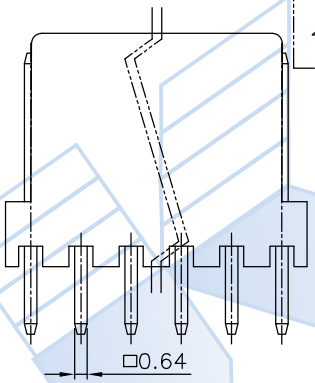

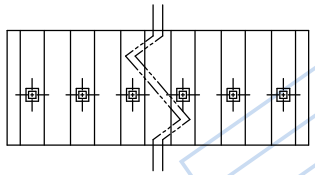

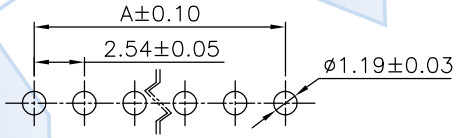

RECOMMENDED PCB LAYOUT

Part NO.	Material	Color/Finish
P2510I-XX(LF)	Nylon UL 94V-2	Plated Tin over Nickel
P2510I-XXG(LF)	Nylon UL 94V-2	Gold
P2510I-XXNXX(LF)	Nylon UL 94V-2	Plated Tin over Nickel
P2510I-12N4,12(LF)		
P2510I-XX-V0	Nylon UL 94V-0	Plated Tin over Nickel

Circuits	Part No.	Dim.A	Dim.B	Circuits	Part No.	Dim.A	Dim.B
2	P2510I-02(LF)	2.54	5.08	12	P2510I-12(LF)	27.94	30.48
3	P2510I-03(LF)	5.08	7.62	13	P2510I-13(LF)	30.48	33.02
4	P2510I-04(LF)	7.62	10.16	14	P2510I-14(LF)	33.02	35.56
5	P2510I-05(LF)	10.16	12.70	15	P2510I-15(LF)	35.56	38.10
6	P2510I-06(LF)	12.70	15.24	16	P2510I-16(LF)	38.10	40.64
7	P2510I-07(LF)	15.24	17.78	17	P2510I-17(LF)	40.64	43.18
8	P2510I-08(LF)	17.78	20.32	18	P2510I-18(LF)	43.18	45.72
9	P2510I-09(LF)	20.32	22.86	19	P2510I-19(LF)	45.72	48.26
10	P2510I-10(LF)	22.86	25.40	20	P2510I-20(LF)	48.26	50.80
11	P2510I-11(LF)	25.40	27.94				

台灣駿品端子股份有限公司 TKP 2012.05.11 工程部出圖章

E118260

PART NO.	P2510I-XX(LF)			Part NO.	Material	Color/Finish	Remark	APPROVAL
TITLE	2.54mm Wire to Board			As above				DRAWN: 高琇瑩
THIRD ANGLE	SCALE	UNIT	SHEET NO	TOLERANCE	DATE	ODD NUMBERS	REV	CHECKED: 張明遠
	2.5:1	mm	1/1	.X± 0.30 .XXX±0.10	2012.05.11	ENG951381	A5	APPROVED: 陳泓宇
	254-112		A254-009	.XX± 0.20 ANGLE±2°				