| | | | |
|---|---|---|---|
| Rating | 3A 12VDC,1.5A 24VDC | Mount Hole | Circuit Structure |
| Contact R | 50m ohm Max. | 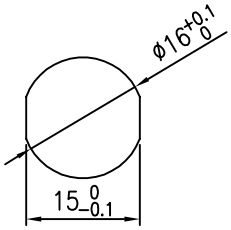 | 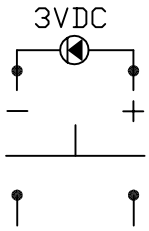 |
| Insulation R | DC 500V 100M ohm Min. | | |
| Dielectric Strength | AC 1500V 1 minute | | |
| Operation Temperature | −20°C~85°C | | |
| Circuit | 4P SPST OFF−ON (LED) | | |



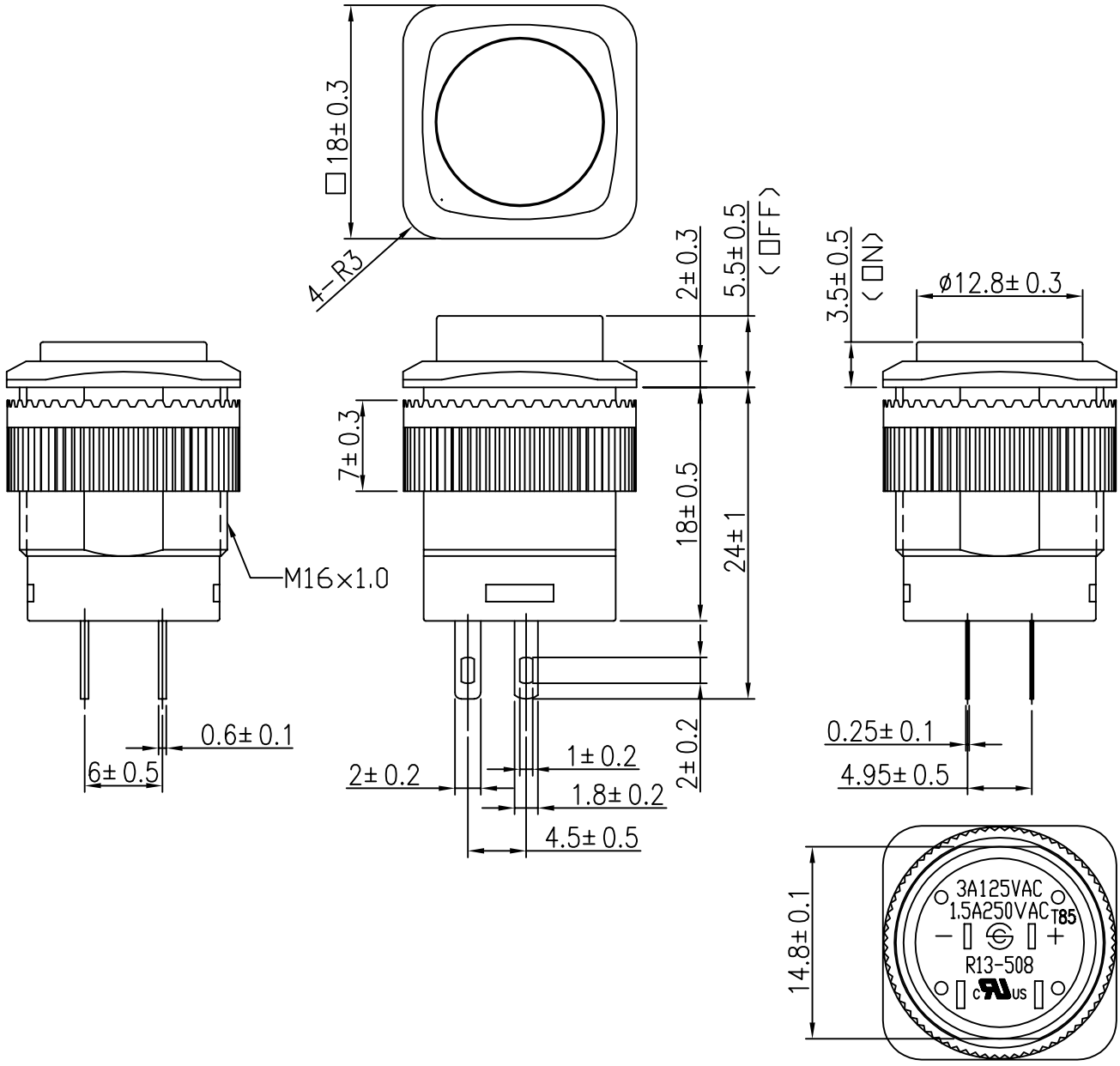


C8\R13\R13-508BL-05

| | | | |
|---|---|---|---|
| | | | △ |
| | | | △ |
| Date | Name | Descriptions | NO |

| | | | | | | |
|---|---|---|---|---|---|---|
| Drawing | Check | Approval | SCI No. | | Model Name | PUSH SWITCH |
| 曹 盈 芳 | | 王 佰 山 | Customer No. | | Model No. | R13−508BL−05 |
| 06/18/'04 | | 06/18/'04 | Unit | mm | SHIN CHIN INDUSTRIAL CO., LTD. | |