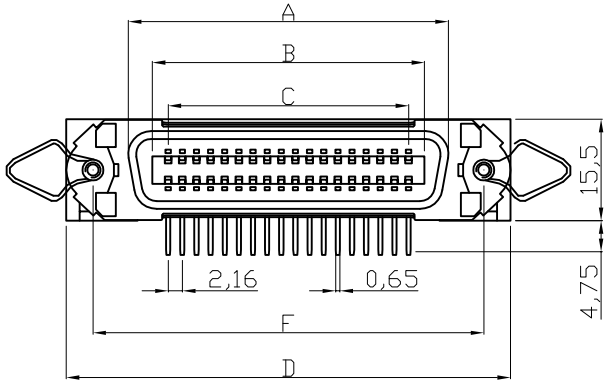

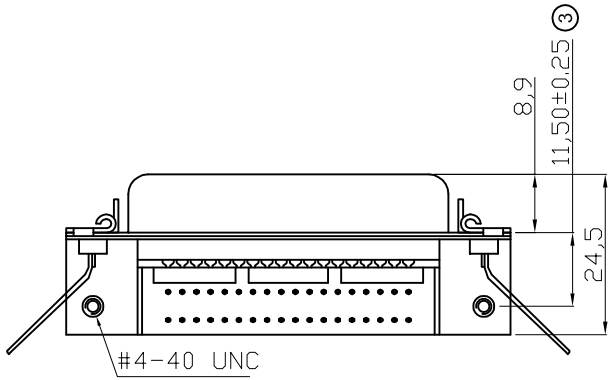

Female

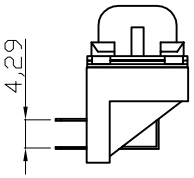

Product Specification

Material

Insulator :Glass-Filled Thermoplastic PBT,UL94V-0 rated,Blue
Contact :Brass
Shell :Steel, 100u" Tin Over 50u" min Nickel.
Boardlock :Brass, 100u" min Nickel Plated.

Electrical

Contact Resistance :20 milliohms Max at 3 AMP DC.
Insulation Resistance :1000 magohms at 500 VDC
Dielectric Withstanding Voltage : 1000 VAC/rms 60Hz for 1 minute
Current Rating :5 AMP
Volatge Rating :250 VAC/rms 60Hz

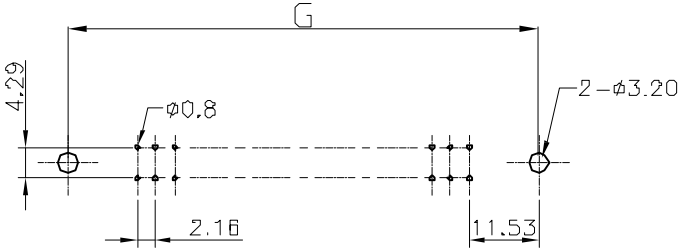

Dimensions

Positions	A	B	C	D	F
14	25.10	17.70	12.96	44.00	36.00
24	35.80	28.74	23.76	54.76	46.80
36	48.90	41.60	36.72	67.82	59.70
50	64.06	56.70	51.84	82.92	74.90

RoHS compliant

Scale	Free
TOLERANCE	
X.	±0.38
X.X	±0.25
X.XX	±0.13
X.°	±3°
X.X°	±1.0°

Id.	Modification	Date	Name
③	Update	19.04.2013	Winnie
②	Update	30.06.2009	Dean
①	Drawn	30.06.1999	Hellwig

	Date	Name
Drawn	30.06.1999	Hellwig
Approved	19.04.2013	Winnie

Customer-No.

ASSMANN WSW-No. A-57/xx FR/KL

Drawing-No. ASS 0361 CO

rev03

Replace

Sheet

ASSMANN WSW components

SVxxx