REVISIONS		
ISS	ZONE	DESCRIPTION\PER REQUEST\DATE

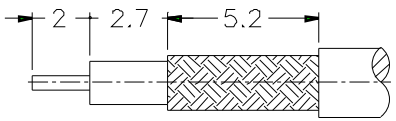

RECOMMENDED
CABLE STRIPPING DIM'S

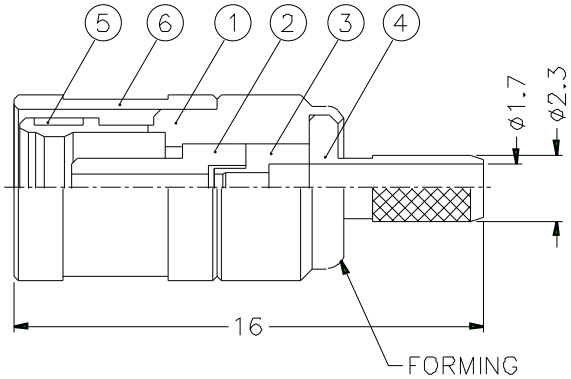

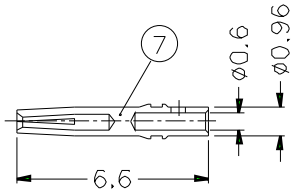

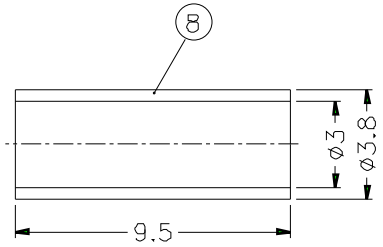

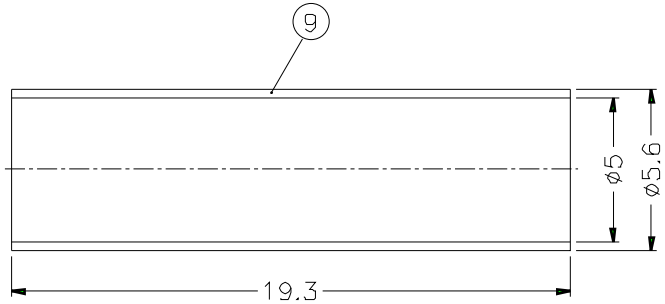

NOTES: FINISH (PLATING THICKNESS IN MICRO-INCHES)
1. BRASS PER QQ-B-626
2. NICKEL PL. 100 MIN. THICK OVER COPPER STRIKE
3. BERYLLIUM COPPER PER QQ-C-530
4. GOLD PL. 30 MIN. THICK OVER NICKEL PL. 100 MIN. THICK OVER COPPER STRIKE
5. TEFLON MIL-P-19468

1. CRIMPED FERRULE HEX CRIMP SIZE .128"
2. CONTACT PIN TO SOLDER

NO.	DESCRIPTION	MATERIAL	FINISH	Q'TY	DRAWING NO.
9	HEAT SHRINK TUBING			1	HT-56/5X193
8	FERRULE	COPPER	NOTE 2	1	FR-38/3X95C
7	CONTACT PIN	NOTE 3	NOTE 4	1	SMB6121B2-5-096/06-D
6	SHELL	NOTE 1	NOTE 2	1	SMB5000-1
5	RETAINER RING	NOTE 3	NATURAL	1	SMB5000-6
4	BARREL	NOTE 1	NOTE 2	1	SMB6121A1-4-23/17-C
3	INSULATOR	NOTE 5	NATURAL	1	SMB6121B2-3T-50
2	INSULATOR	NOTE 5	NATURAL	1	SMB6121A1-2T-50
1	BODY	NOTE 1	NOTE 2	1	SMB6121A1-1-B

DIMENSIONS ARE IN MILLIMETERS

UNLESS OTHERWISE SPECIFIED TOLERANCES
0.5-6 = ±0.2
6-30 = ±0.4
30-120 = ±0.6
120-315 = ±1
315-1000 = ±1.6
1000-2000 = ±2.4

SCALE 4/1 | ISSUE A

PART NO. SMB6121A1-003-NT30G-5-50

APPROVED | DATE 10-11-01'

CHECKED | DATE 10-11-01'

DRAWN | DATE 10-11-01'

FILE NO

Amphenol

TITLE SMB CRIMP PLUG (FOR RG-174/U,188A/U,316/U)

DRAWING NO. KJ-SMB6121A1-003-NT30G

ITEM NO.