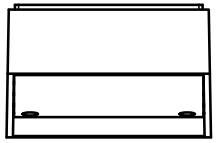

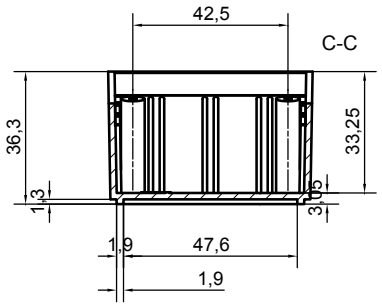

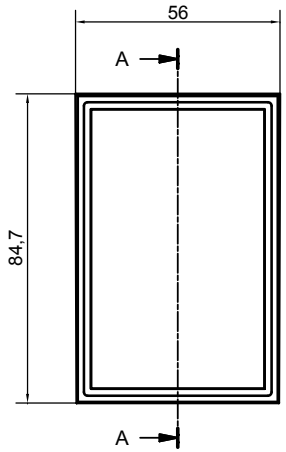

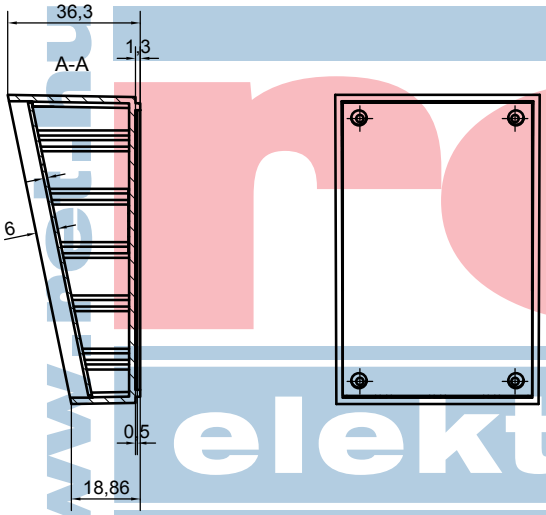

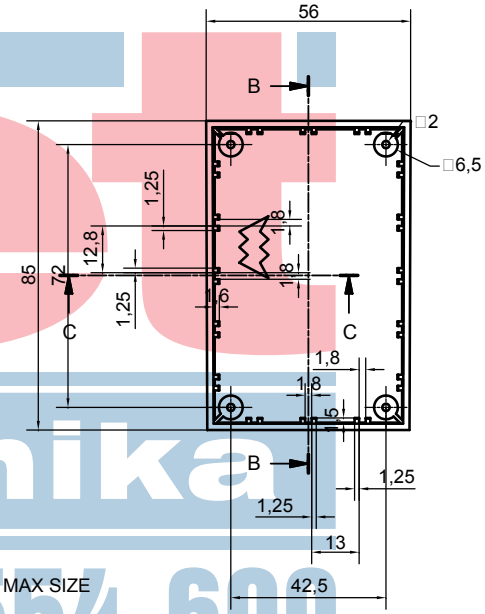

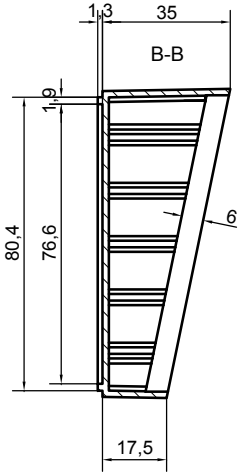

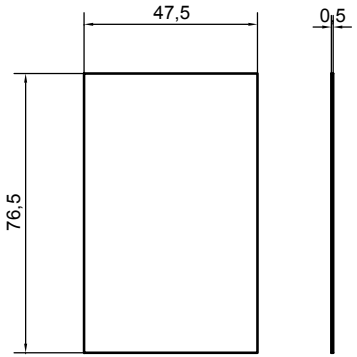

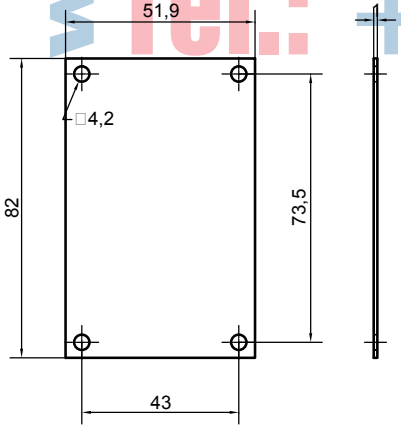

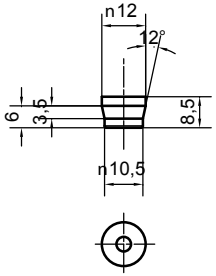

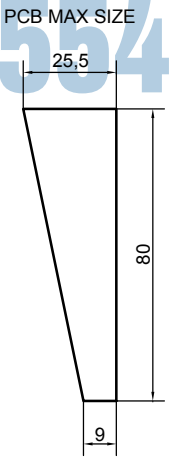

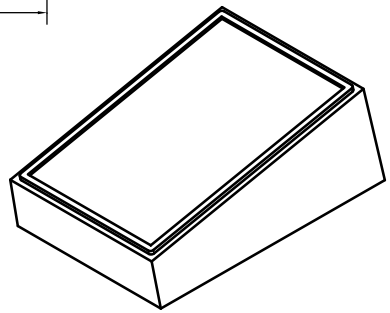

www.reel.hu
reel elektronika
Tel.: +36 62 554-600

TEKO ENCLOSURES	Denomination: Assembly 101	Part. Number: 101	
	Subject to technical modification without prior notice. Tipographical and other errors do not justify any claim for damages. All dimensions should be verified using an actual moulded part.	Rev. Index	Scale
	This document contains proprietary information **TEKO S.p.a.** and is tendered subject to the conditions that the information be retained in confidence not be reproducer or copied and not be used or incorporated in any product.	Date 16/12/2005	Format design A2