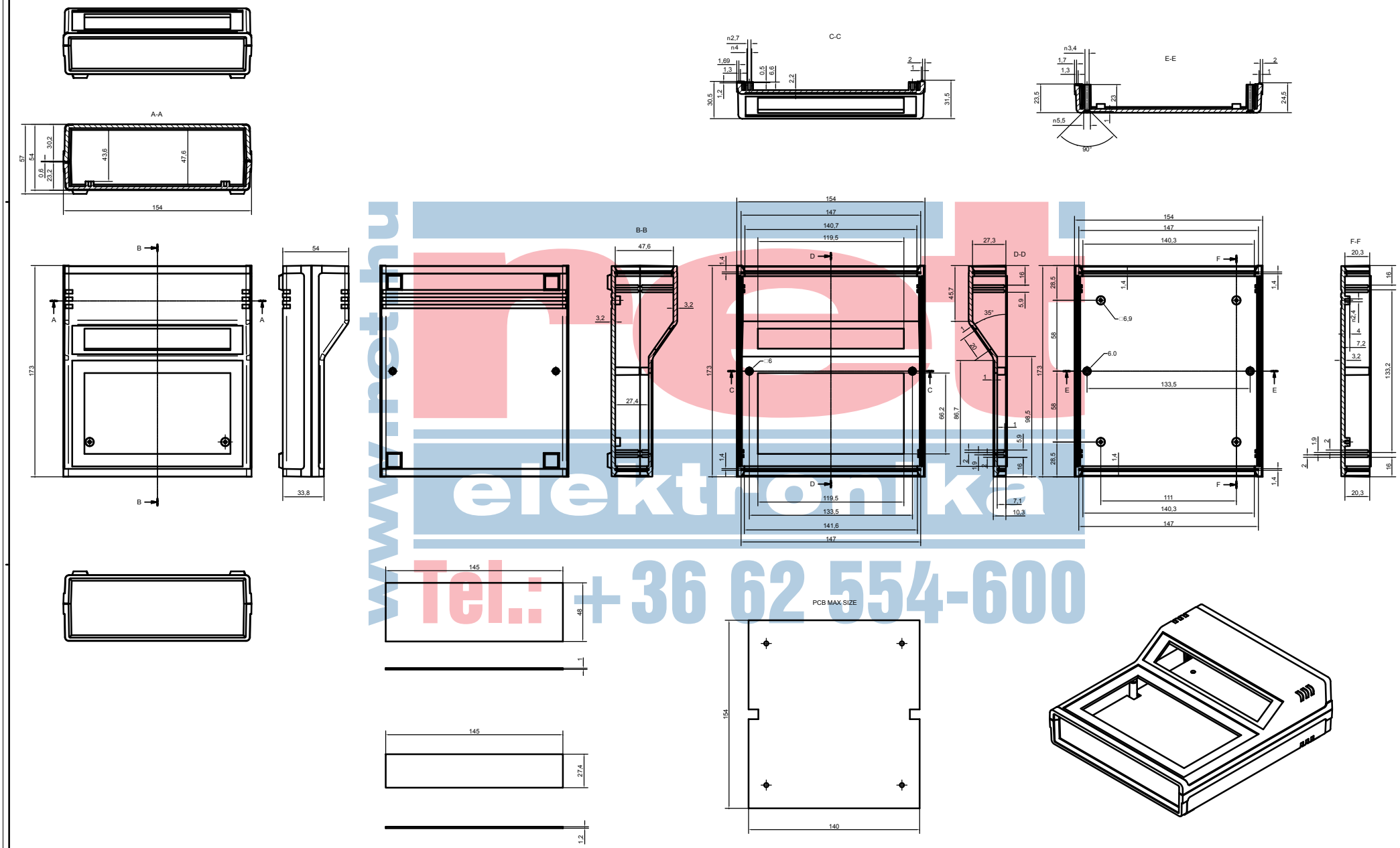

www.nett.hu
nett elektronika
Tel.: +36 62 554-600

ENCLOSURES	Assembly 242/O	242/O
	Subject to technical modification without prior notice. Tipographical and other errors do not justify any claim for damages. All dimensions should be verified using an actual moulded part.	Rev. Index / Date
	This document contains proprietary information MOTA-S.p.a. and is tendered subject to the conditions that the information be retained in confidence not be reproduced or otherwise and not be used or incorporated in any product.	Date 21/02/2006 / Format design A0