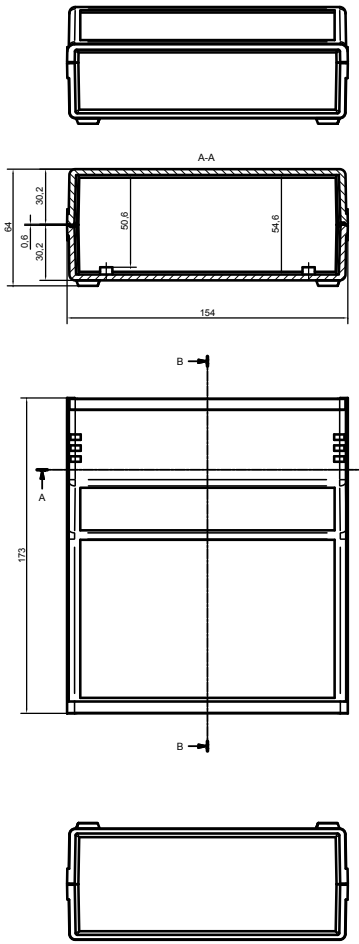

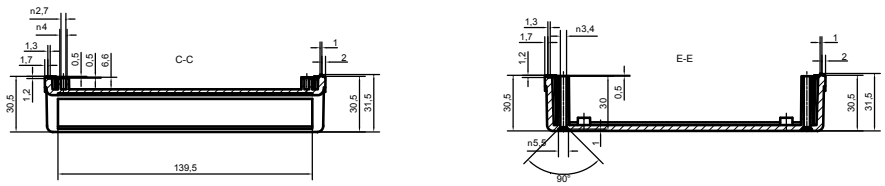

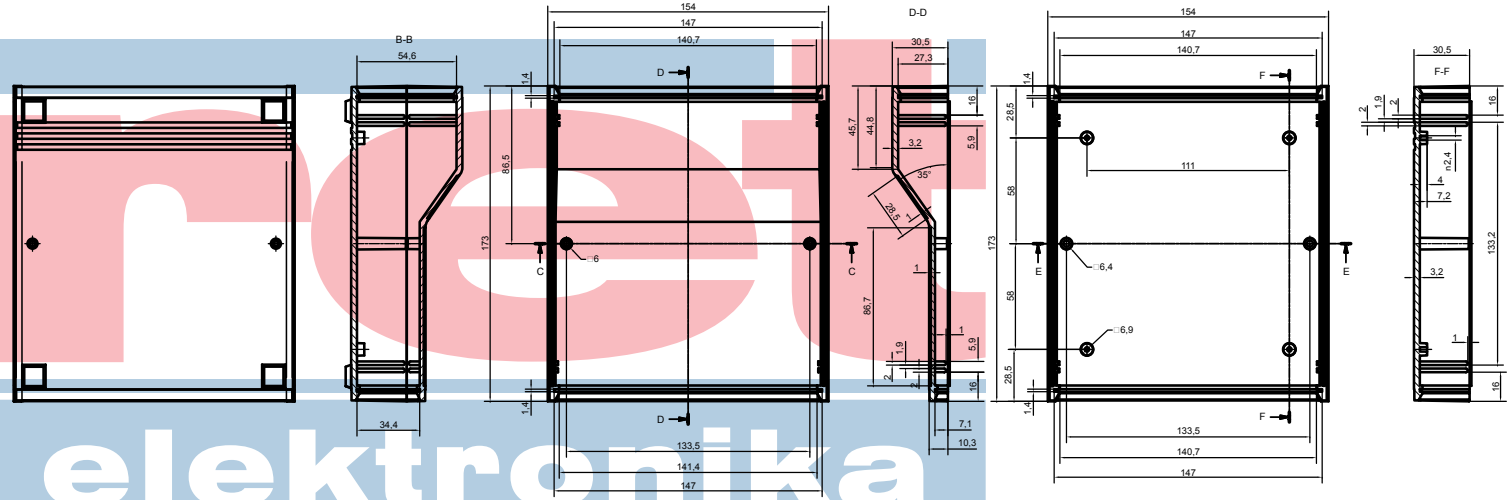

www.ret.hu
ret
elektronika
Tel.: +36 62 554-600

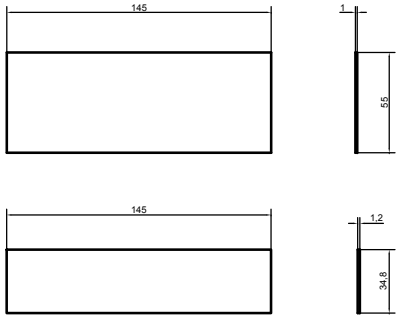

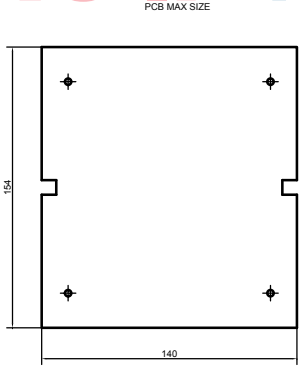

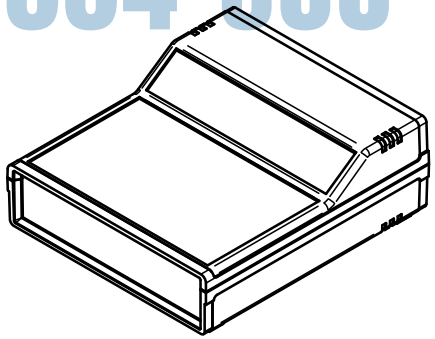

ENCLOSURES	Assembly 243	243
	Subject to technical modification without prior notice. Typographical and other errors do not justify any claim for damages. All dimensions should be verified using an actual moulded part.	
	This document contains proprietary information. MOUD s.r.o. and is tendered subject to the conditions that the information be retained in confidence not be reproduced or otherwise and not be used or incorporated in any product.	Date 21/02/2006 · Format design A0