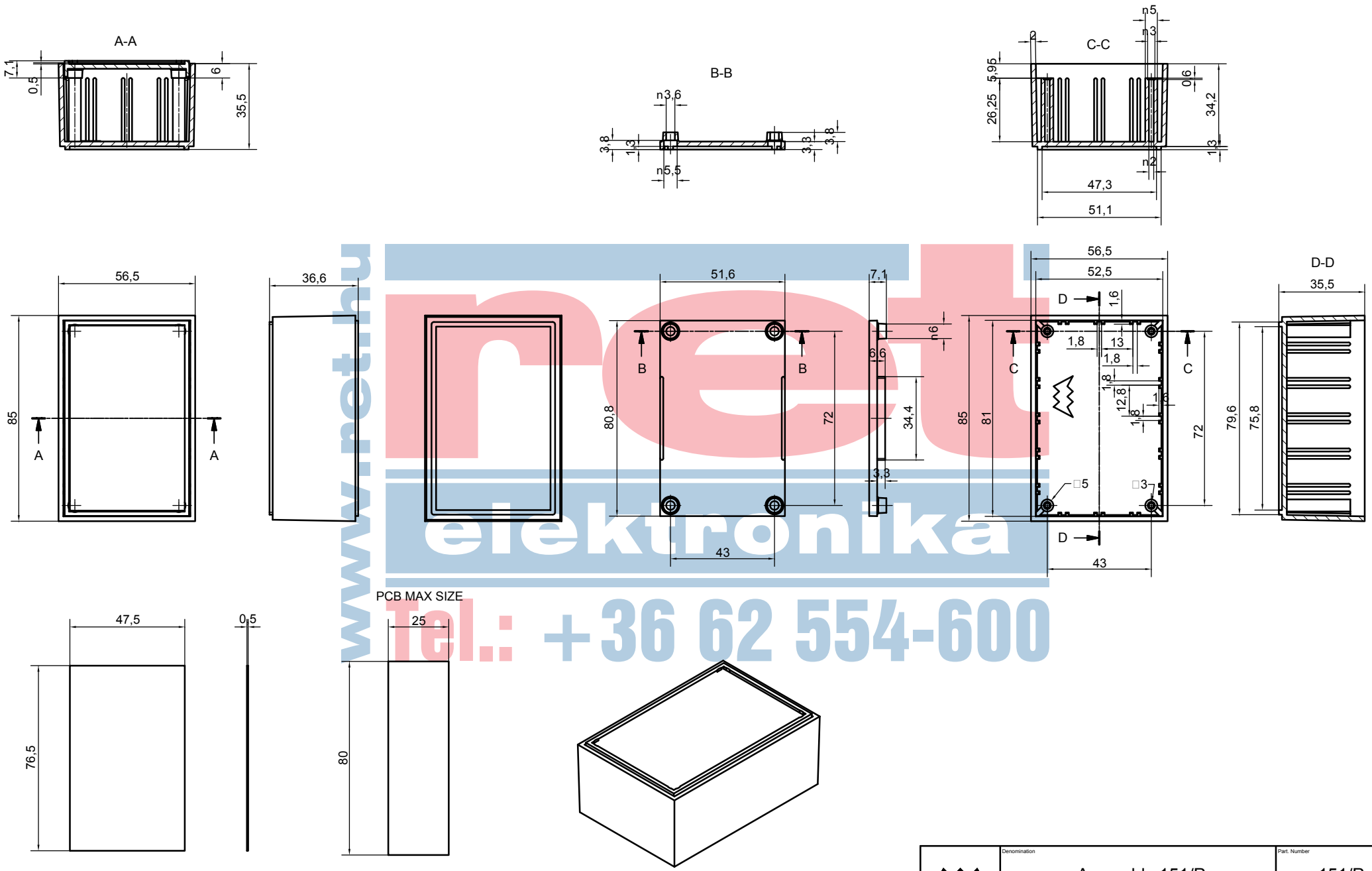

www.net.hu
net elektronika
Tel.: +36 62 554-600

TEKO ENCLOSURES	Denomination: Assembly 151/P	Part. Number: 151/P
	Subject to technical modification without prior notice. Tipographical and other errors do not justify any claim for damages. All dimensions should be verified using an actual moulded part.	Rev. Index / Scale
	This document contains proprietary information **TEKO S.p.a.** and is tendered subject to the conditions that the information be retained in confidence not be reproducer or copied and not be used or incorporated in any product.	Date: 14/12/2005 / Format design: A2