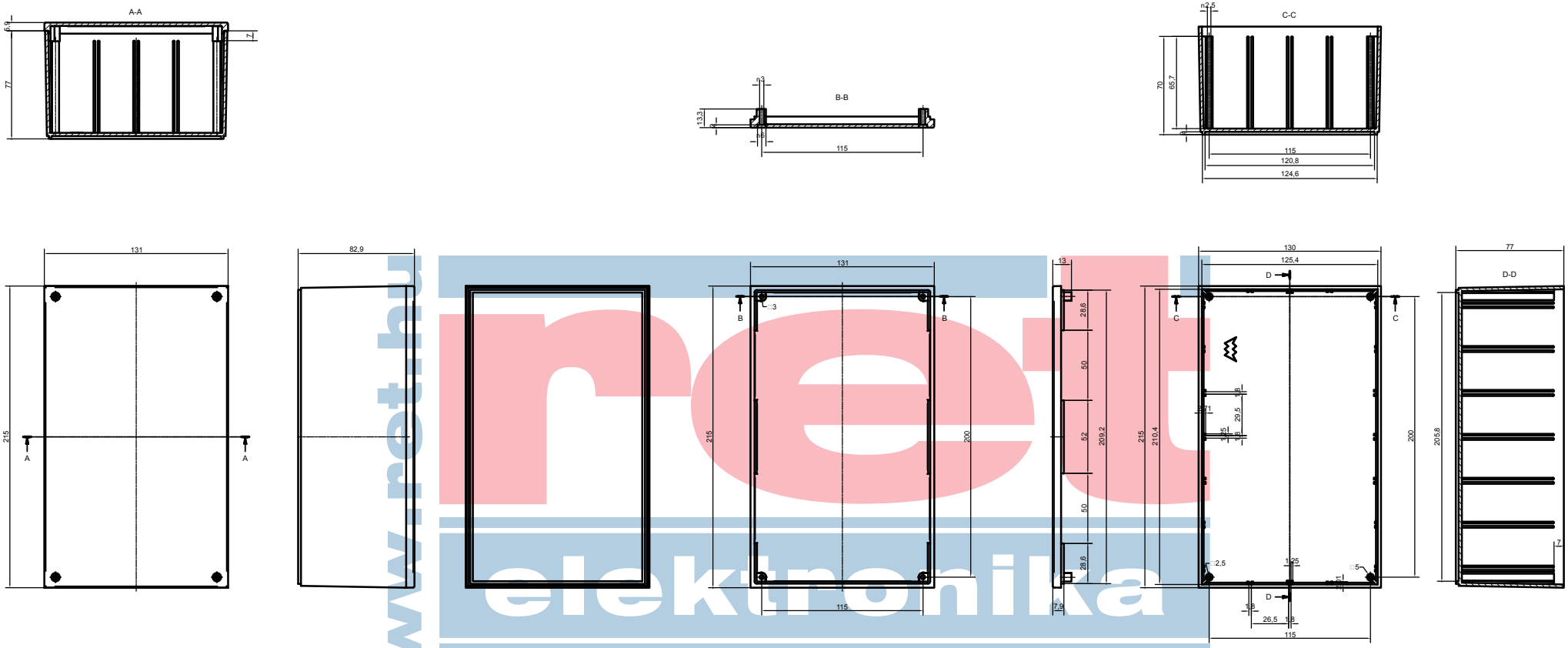

www.net.hu
net elektronika
Tel.: +36 62 554-600

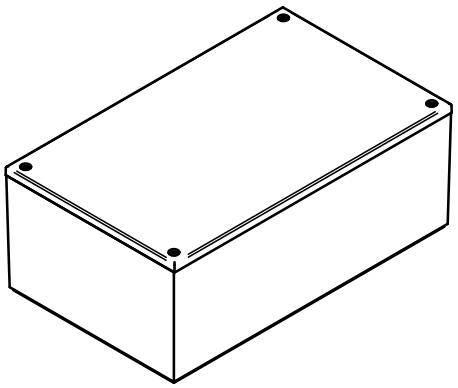

ENCLOSURES	Assembly CP/4	CP/4
	Subject to technical modification without prior notice. Tipographical and other errors do not justify any claim for damages. All dimensions should be verified using an actual moulded part.	
	This document contains proprietary information MOTO s.p.a. and is tendered subject to the conditions that the information be retained in confidence not be reproduced or otherwise and not be used or incorporated in any product.	Date 14/12/2005 · Format design A0