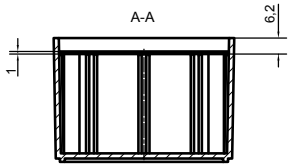

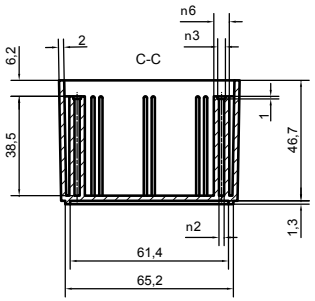

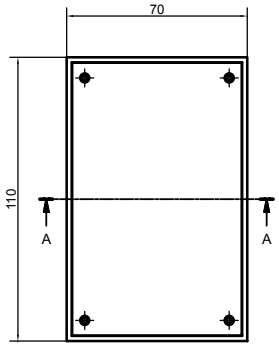

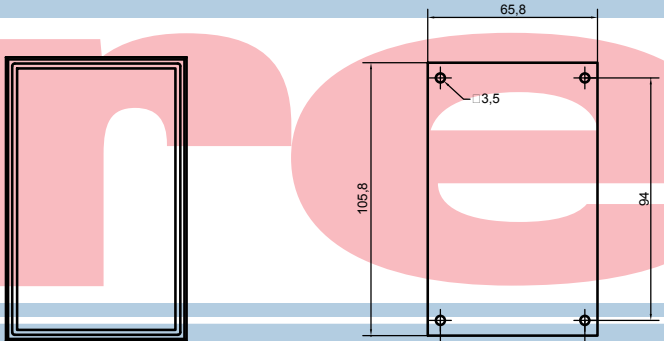

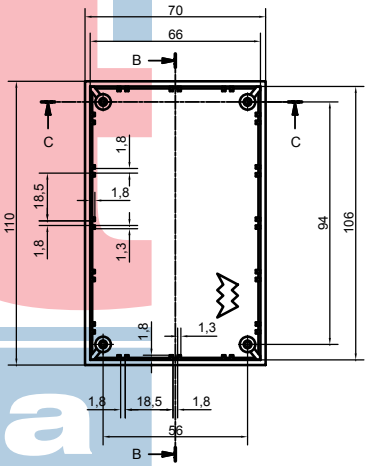

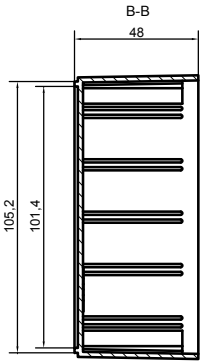

www.ret.hu
ret
elektronika
Tel.: +36 62 554-600

PCB MAX SIZE

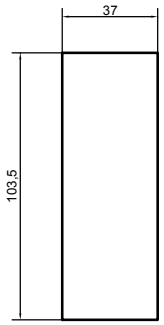

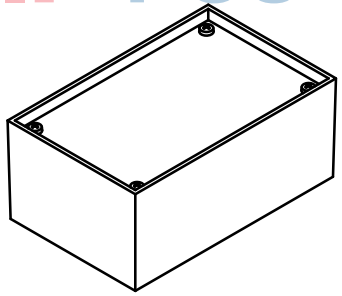

TEKO ENCLOSURES	Denomination: Assembly K/2	Part. Number: K/2
	Subject to technical modification without prior notice. Tipographical and other errors do not justify any claim for damages. All dimensions should be verified using an actual moulded part.	Rev. Index / Scale
	This document contains proprietary information **TEKO S.p.a.** and is tendered subject to the conditions that the information be retained in confidence not be reproducer or copied and not be used or incorporated in any product.	Date: 14/12/2005 / Format design: A1